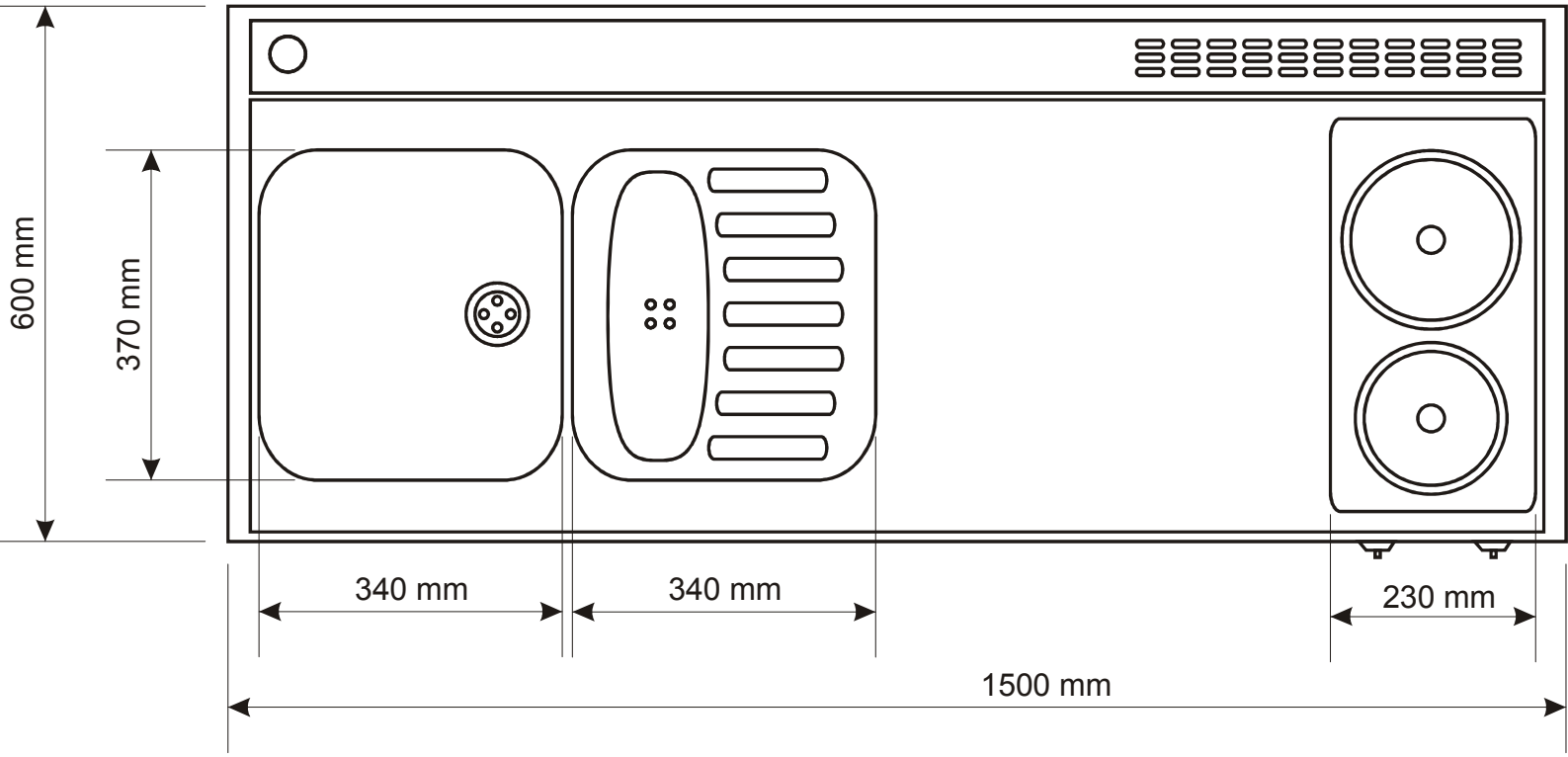
600 mm
370 mm
340 mm
340 mm
230 mm
1500 mm

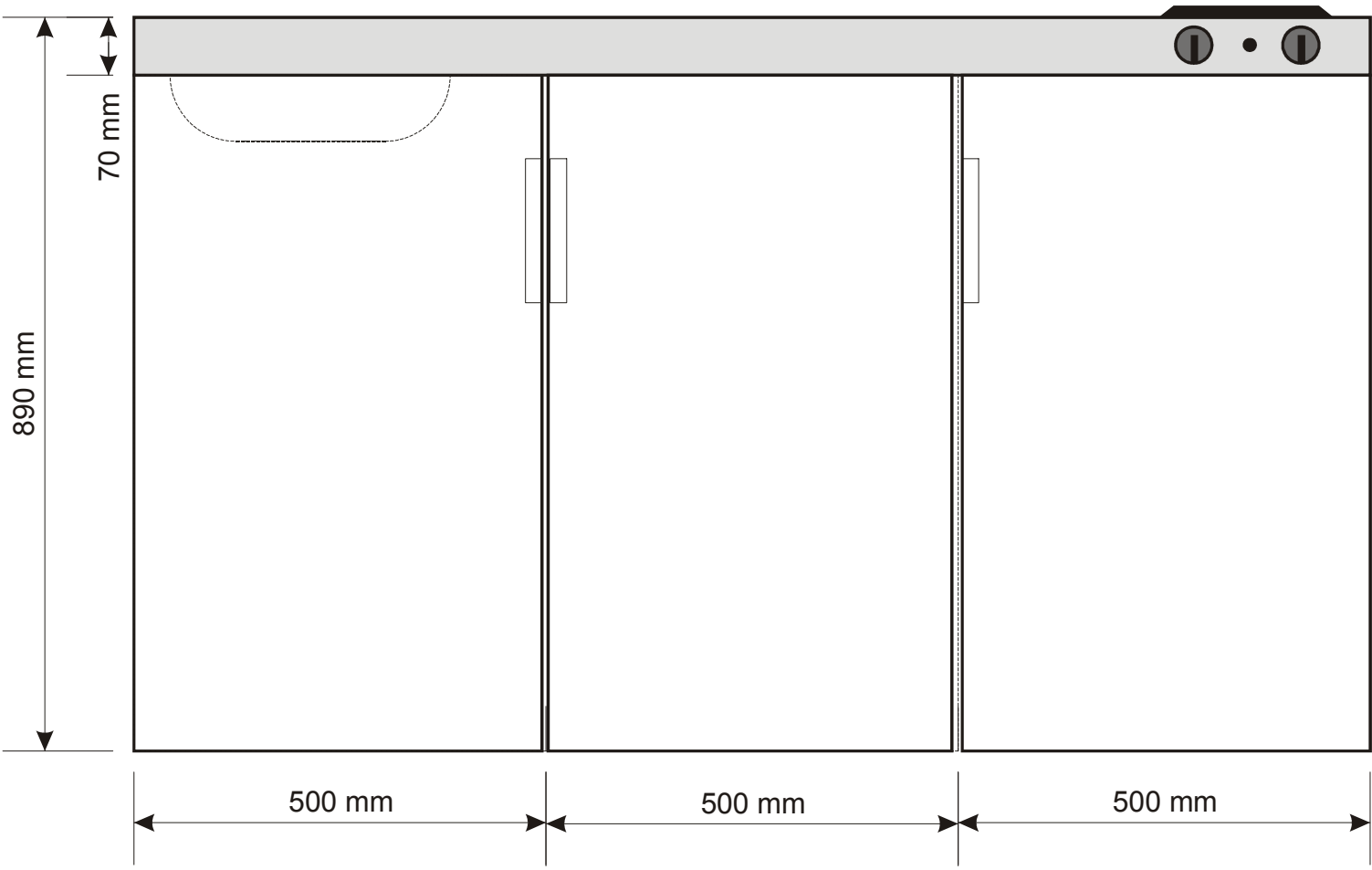
70 mm
890 mm
500 mm
500 mm
500 mm